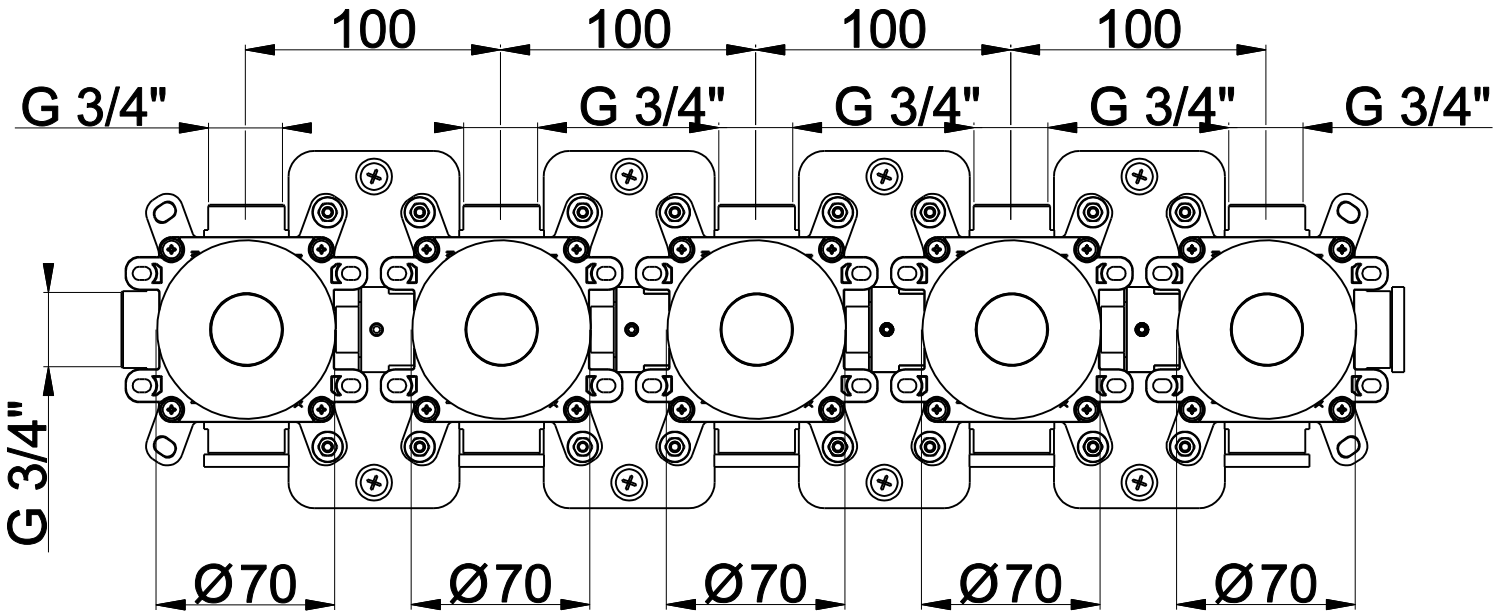
100
100
100
100
G 3/4"
G 3/4"
G 3/4"
G 3/4"
G 3/4"
G 3/4"
Ø70
Ø70
Ø70
Ø70
Ø70

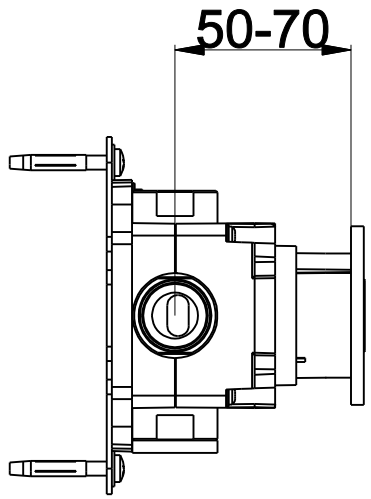
50-70